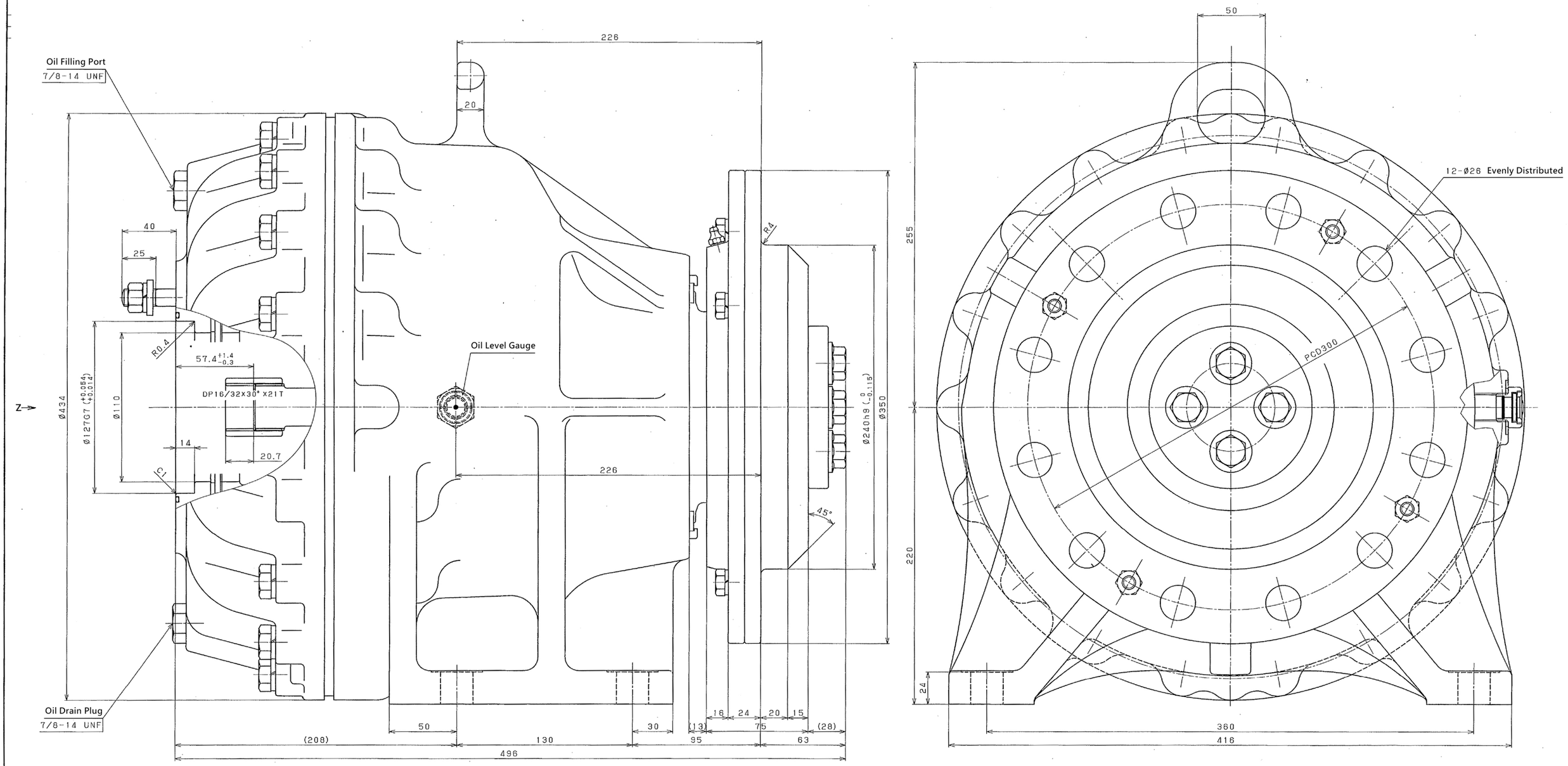

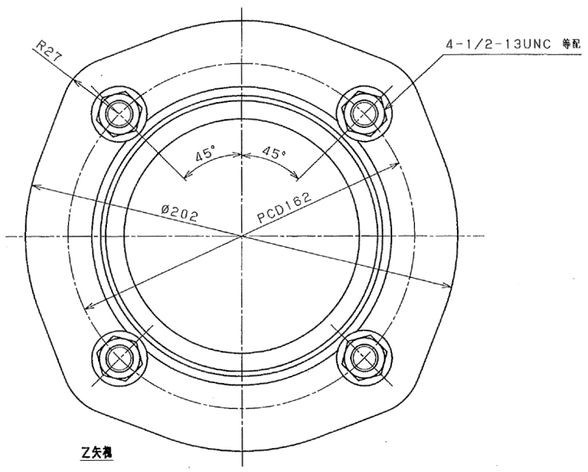

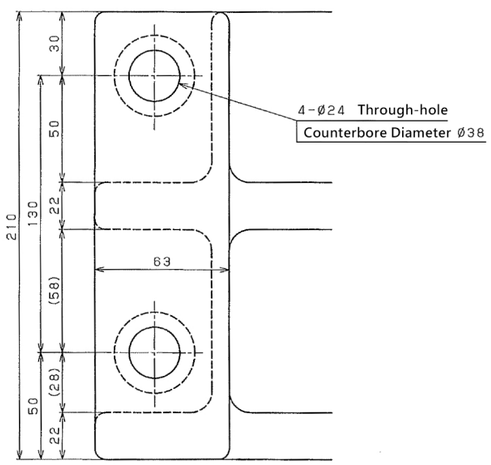

MODEL	;	PK86BS
GEAR RATIO	;	1/132
OUTPUT TORQUE	;	55000N・m (MAX)
OUTPUT SPEED	;	15 min^{-1} (MAX)
FLANGE ANGLE	;	±2° 40′
WEIGHT	;	234 Kg
OIL CAPACITY	;	7.75liter (体積を16.5° 傾けて)